□□□□ □□□ □□□□ □□ □□□ □□□ □□□□ □ UVC □□ 222nm □□□ □□ UV □□ □□

□□□□(V)	DC 24V
□□ □□□(lm/w)	125
□□□□(□)	□□
□□ □□□ □□□	Far UVC 222nm □□ □□ □□ □□□
□□(□□)	4000
□□ □□(□□)	10000
□□□□□□□	□, □□, □□, □□□, □□□ □□□ □□ □□ □
□□□□□□□	DC
□□□ □□	□□□, □□□□

222nm UVC 20W Module

Shenzhen NewplanetTechnology Co.,LTD
www.irlight.cn
Attn: Judy.Huang 0086-13760193325
E: irlightsales02@hotmail.com

222nm Module Size

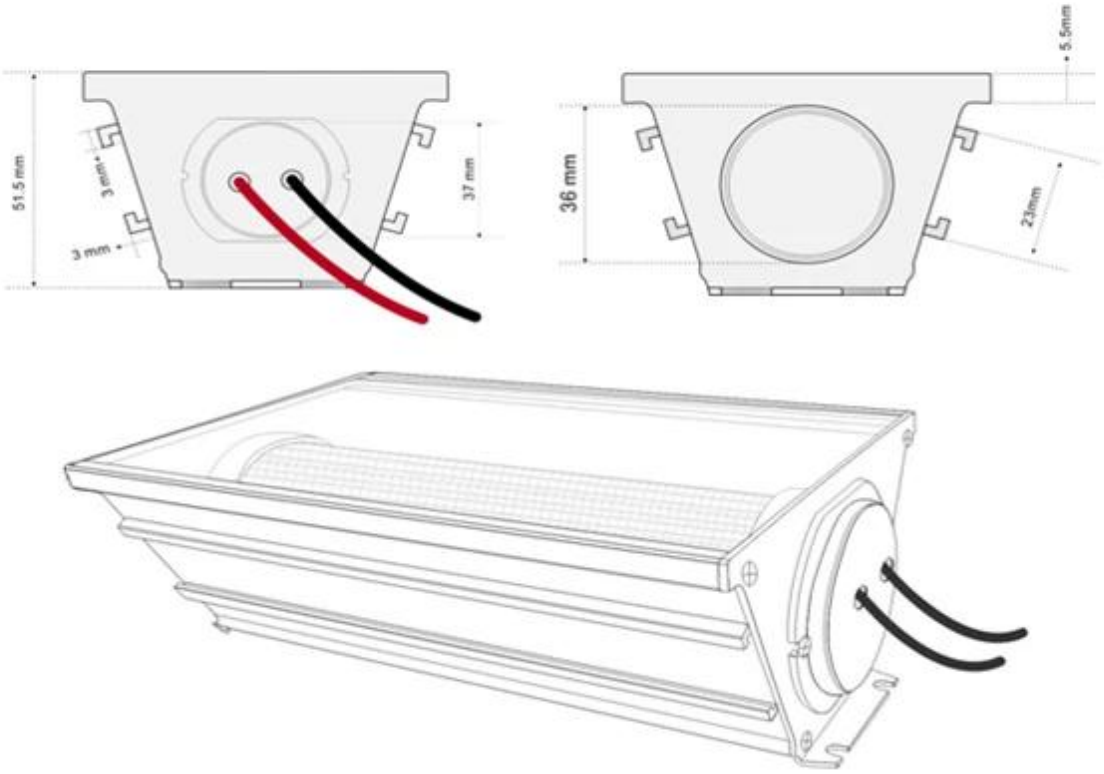

222NM Lamp Structure

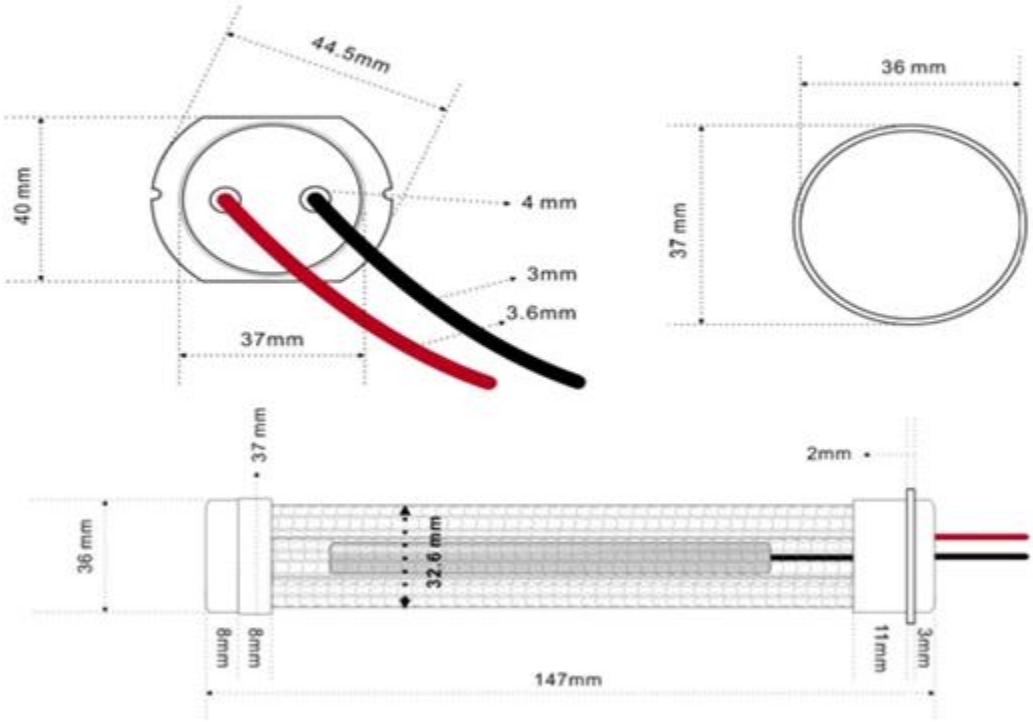

Lamp Module Structure

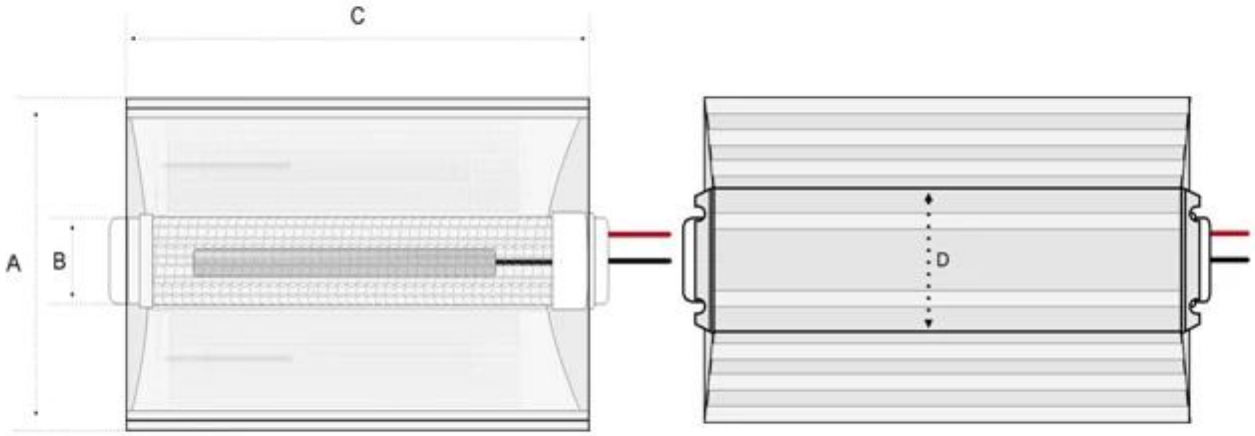

A: 84.5NM	C: 138.6MM
B: 36MM Diameter	D: 40MM

Wavlength Spectrum

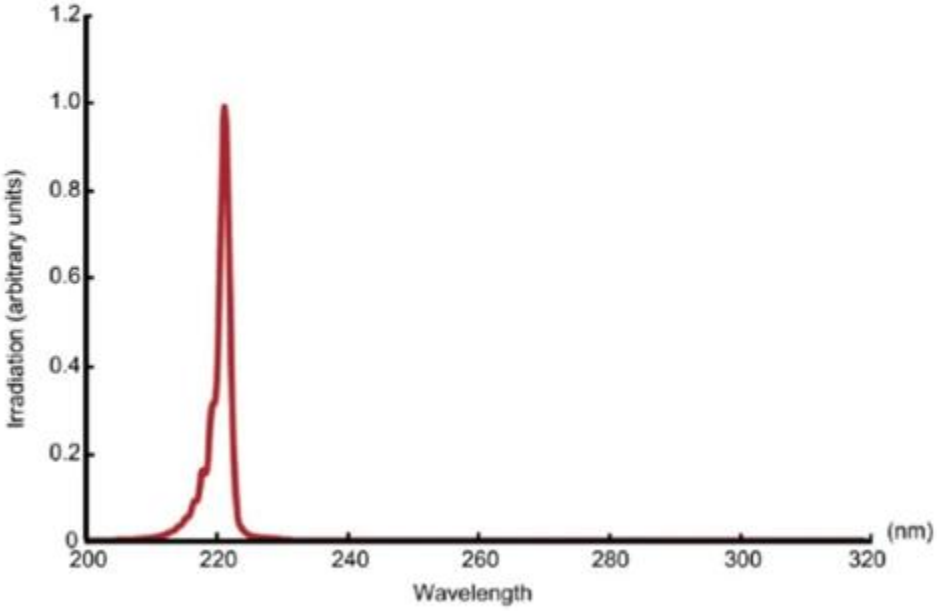

Installtion with ballast

The 222nm must connect with ballast to longer lifetime of 222nm lamp

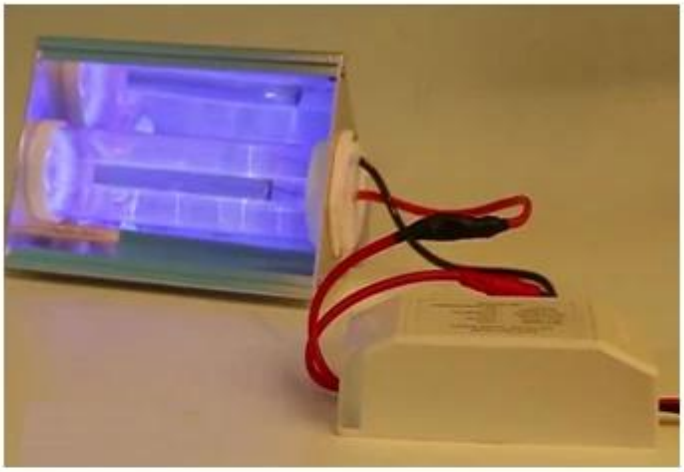

- 222 nm lamp both side connected with a ballast input . And out contact with a suitable adapter to suit for city Electricity.

Lifetime State

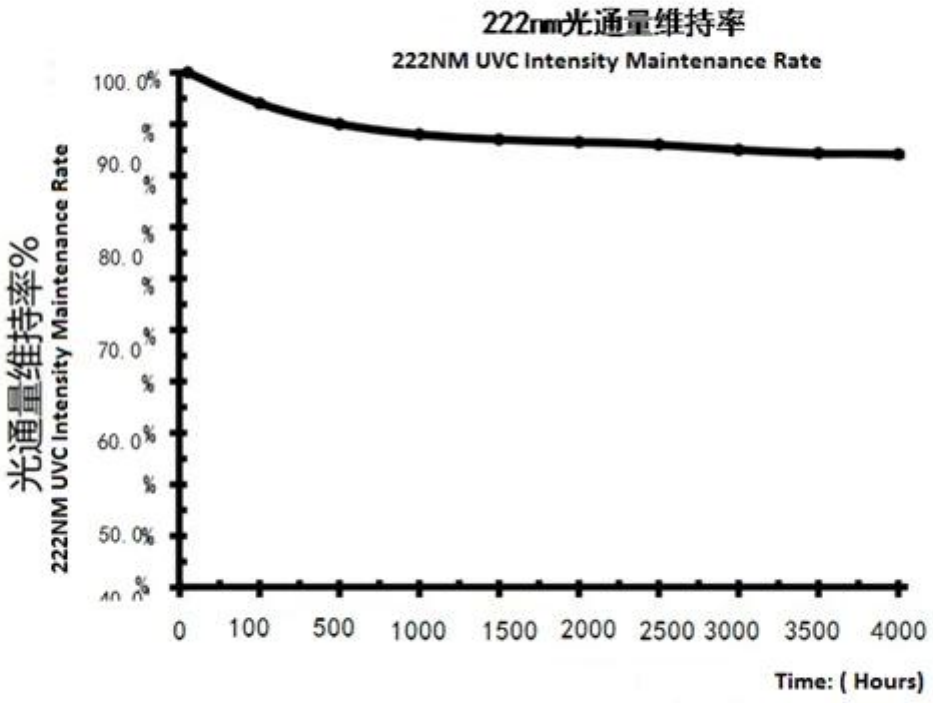

Application

Metre, Hospital, Library,Restaurant, Store, Super Market Hall. Hotel….

●Warning

- During lighting, the external network will generate high voltage. Please do not touch it with your hands.
- When installing or removing the lamp tube or cleaning the lamp box, be sure to turn off the main power supply. (avoid electric shock)six In the light box with appropriate specifications, be sure to use the specified power lamp. (avoid overheating of the lamp box, damage of the lamp tube, short service life, etc.)
- Do not use it around ignition substances such as organic solvents. (avoid fire and explosion)
- Do not let paper, cloth, etc. close to or cover the lamp tube or lamp box. (avoid fire)

□□ □□□□ **222nm UVC □□** □□ □□ □□□, □□□ □□□, □□ □□, □□ □□ □□ □□ □□□□□.