□□□□□□□□□□□□□□□□□ □□ 12V 24V UV □□□□□ 222nm UV□□□

□□□□(V)	DC24V
□□□□□□□□(lm/w)	125
□□□□(□)	1□
□□□□□□□□□□□□□□	□UVC 222nm□□□□□□□□□□□□
□□ (□□)	4000
□□□□□□□□□	1000
□□	□□□□□□□□□□□□□□□□□

DC 12V
35W

222NM Lamp Structure

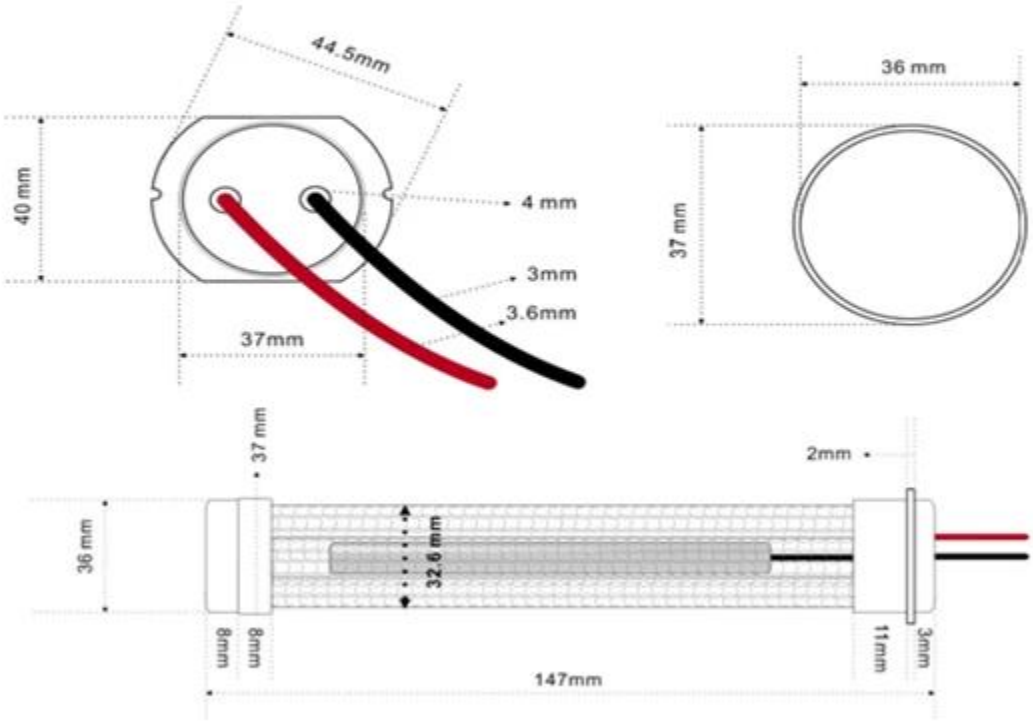

Lamp Module Structure

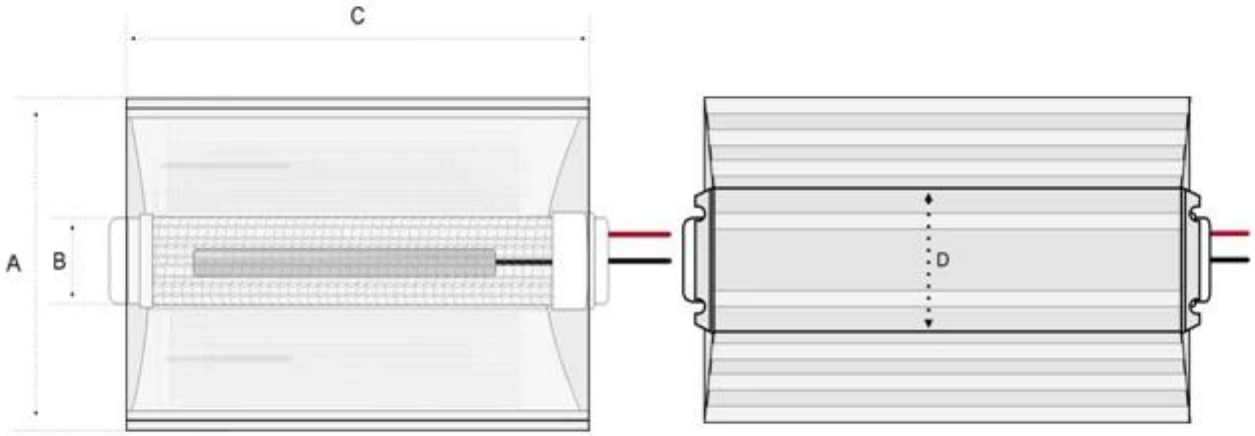

A: 84.5NM	C: 138.6MM
B: 36MM Diameter	D: 40MM

Wavlength Spectrum

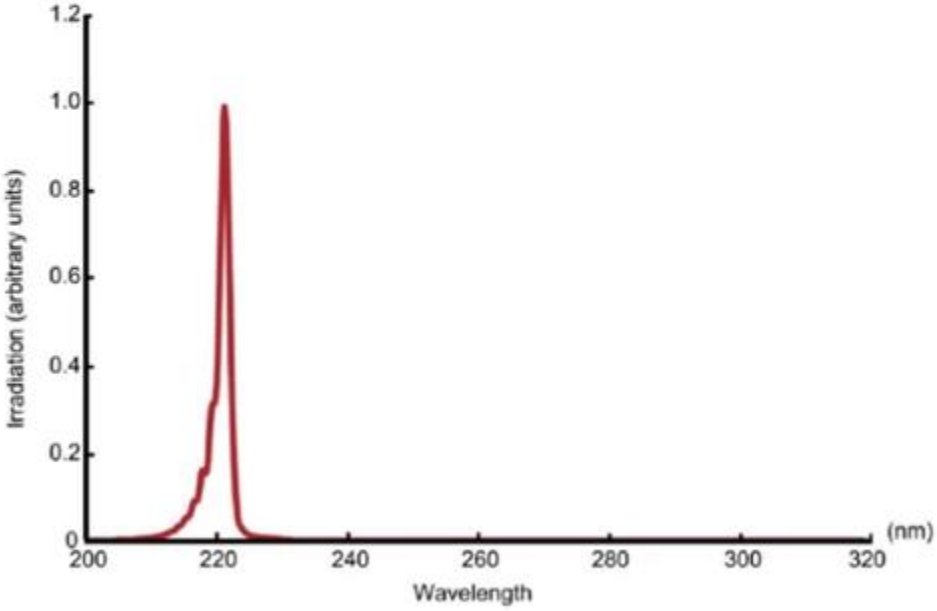

Lifetime State

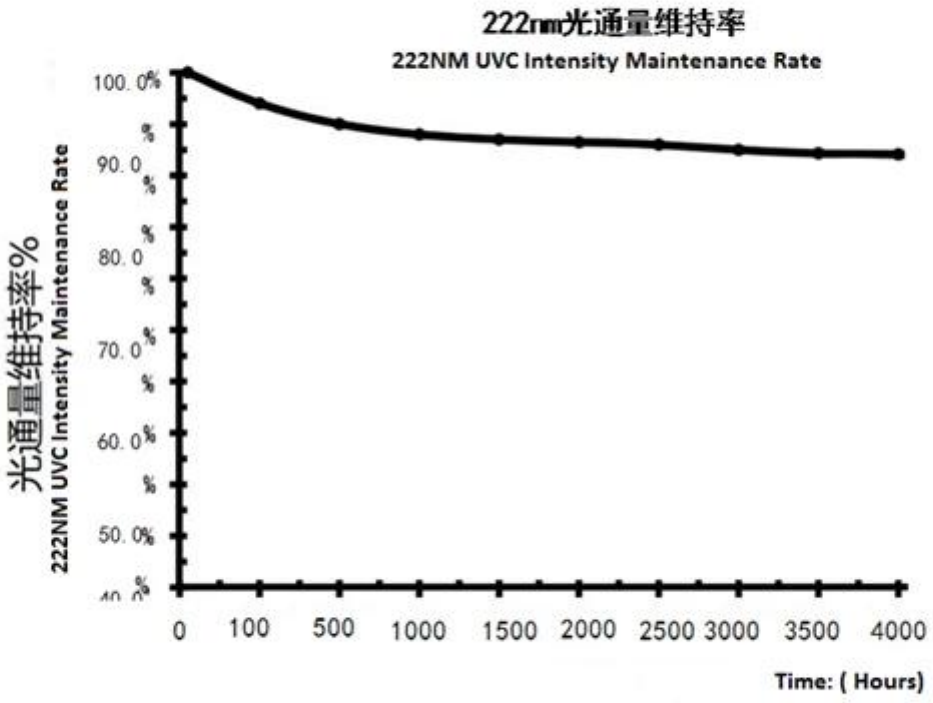

Application

Metre, Hospital, Library,Restaurant, Store, Super Market Hall. Hotel….

●Warning

- During lighting, the external network will generate high voltage. Please do not touch it with your hands.
- When installing or removing the lamp tube or cleaning the lamp box, be sure to turn off the main power supply. (avoid electric shock)six In the light box with appropriate specifications, be sure to use the specified power lamp. (avoid overheating of the lamp box, damage of the lamp tube, short service life, etc.)
- Do not use it around ignition substances such as organic solvents. (avoid fire and explosion)
- Do not let paper, cloth, etc. close to or cover the lamp tube or lamp box. (avoid fire)

UVC 222nm □□□□